| Project Reference No. | Sheet No. |
|---|---|
| 49016 | 1 |

# TYPICAL SECTION NO. 2

MAP 2: FULL DEPTH RECLAMATION ON SR 1002, FROM SR 1203
TO STA. 127+02

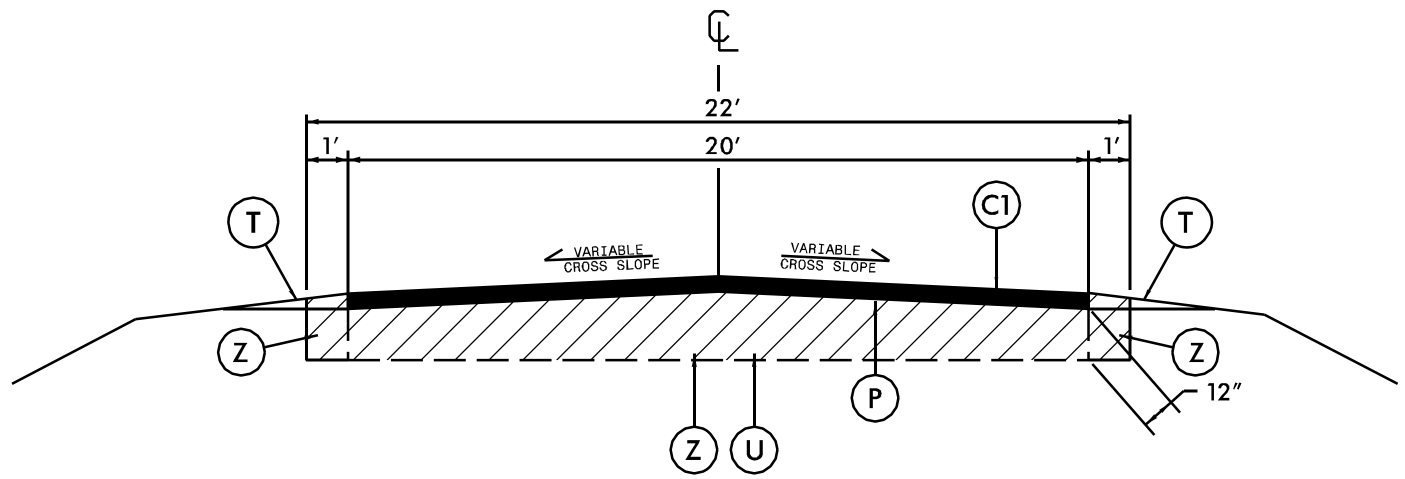


NOTE:

1. SPECIAL ATTENTION IS NEEDED IN ANY AREAS WHICH ARE TO BE WIDENED, TO ENSURE THAT THE BASE CLOSELY MATCHES THE COMPOSITION OF THE MAINLINE PAVEMENT.

## PAVEMENT SCHEDULE

| | |
|---|---|
| C1 | PROP APPROX 3″, ASPHALT CONCRETE SURFACE COURSE, TYPE S9.5B, AT AN AVERAGE OF 168 LBS PER SQ. YD. IN EACH OF TWO LAYERS. |
| P | PRIME COAT AT THE RATE OF 0.35 GAL. PER SQ. YD. |
| T | EARTH MATERIAL |
| U | EXISTING PAVEMENT |
| Z | FULL DEPTH RECLAMATION, MIXING DEPTH 12″ WITH CEMENT TO BE ADDED AT A RATE OF 63 LBS PER SQ. YD. |

NOTE: PAVEMENT EDGE SLOPES ARE 1:1 UNLESS SHOWN OTHERWISE.

$$$$$$SYSTIME$$$$$
$$$$$$$$$$$$DGN$$$$$$$$$$$$$$$$$
$$$$USERNAME$$$$